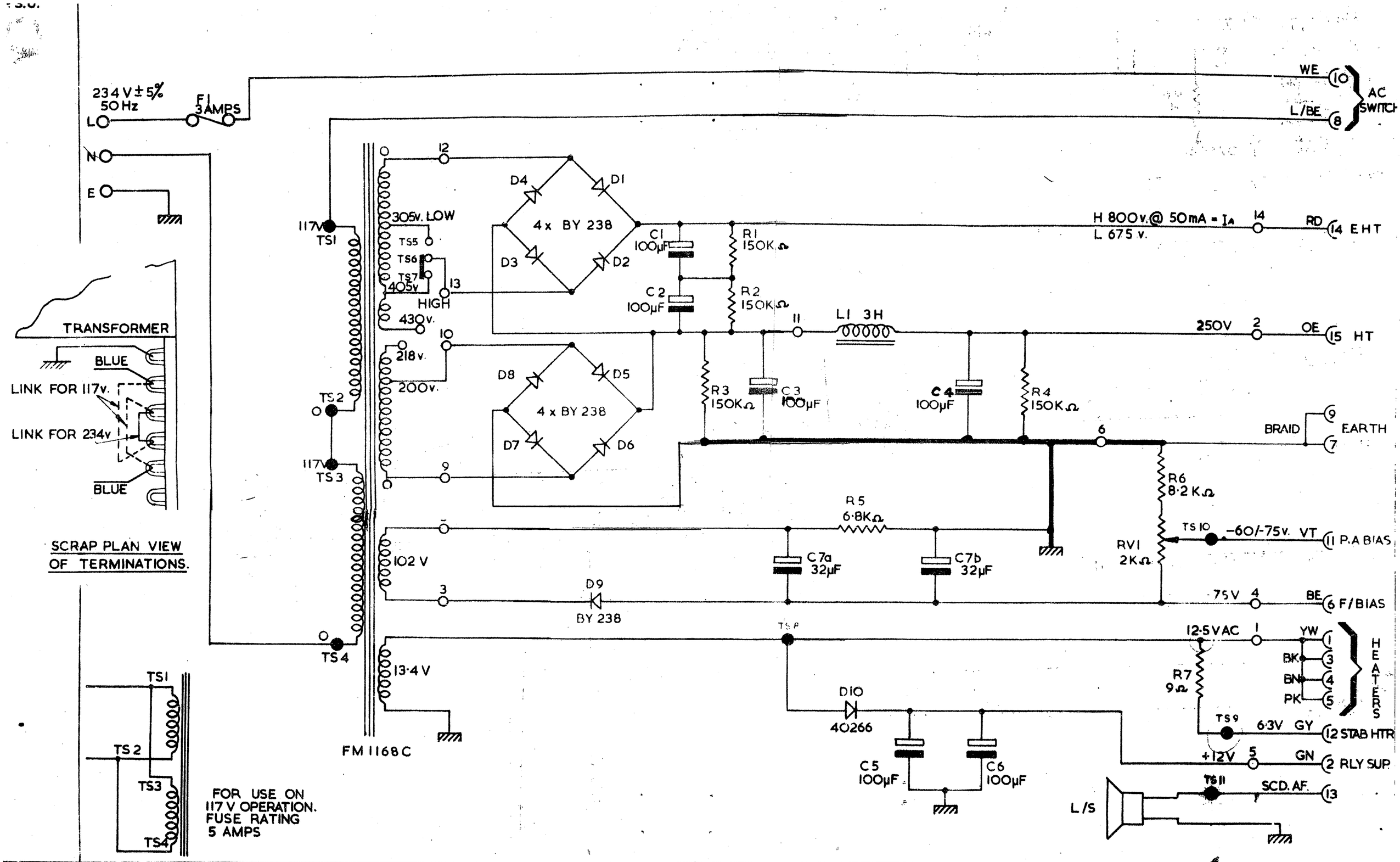

APP'D.				MATERIAL	TOLERANCES	K. W. ELECTRONICS DARTFORD KENT
CHECKED	10	29-7-'70	AM. SHT. 4280. C/N 534 & 539.		FRACTIONS ±	TITLE
	9	9-10-69	REVISED & REDRAWN	FINISH	DECIMALS ±	CIRCUIT DIAGRAM
DRAWN	ISSUE	DATE			ANGLES ±	KW 2000B AC PSU
					UNLESS STATED OTHERWISE	DRG. Nº B 9028